tinyML® EMEA

Enabling Ultra-low Power Machine Learning at the Edge

June 26 - 28, 2023

www.tinyML.org

Imperial College London

Brain Inspired ISFET Arrays

Prateek Tripathi

Supervisors: Prof. Pantelis Georgiou & Dr. Nicolas Moser

Dept. of Electrical and Electronic Engineering, Imperial College London, SW7 2BT, United Kingdom and Centre for Bio-Inspired Technology, Institute of Biomedical Engineering, Imperial College London, SW7 2AZ, United Kingdom

Outline

Outline

- Background
- Opportunity (The future of Diagnostics and ML is tiny and bright)
- Research Questions
- Current Progress
- Future Work

Ion-Sensitive Field-Effect Transistor

The ISFET is fabricated as a **MOSFET with a floating gate**. A change in the ion concentration at the gate causes a variation in the threshold voltage of the device.

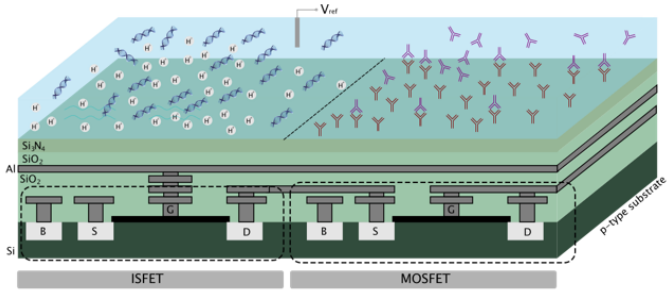

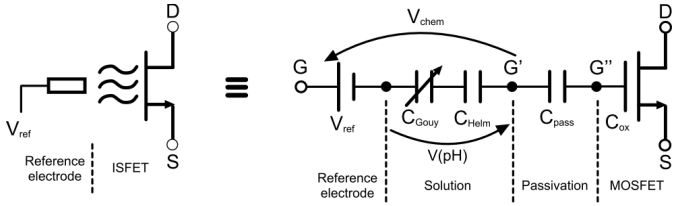

Source: N. Moser, T. S. Lande, C. Toumazou and P. Georgiou, "ISFETs in CMOS and Emergent Trends in Instrumentation: A Review", *IEEE Sensors Journal*, vol. 16, pp. 6496-6514, sep 2016.

Non-ideal Effects

ISFETs suffer from:

- Trapped Charge:

Charge gets trapped on the floating gate of the ISFET, most likely due to charge transfer during chip production, introducing an offset in its threshold voltage

- Drift

Slow monotonic change in the threshold voltage of the ISFET and originates from a transport phenomenon at the interface between the insulator and the solution.

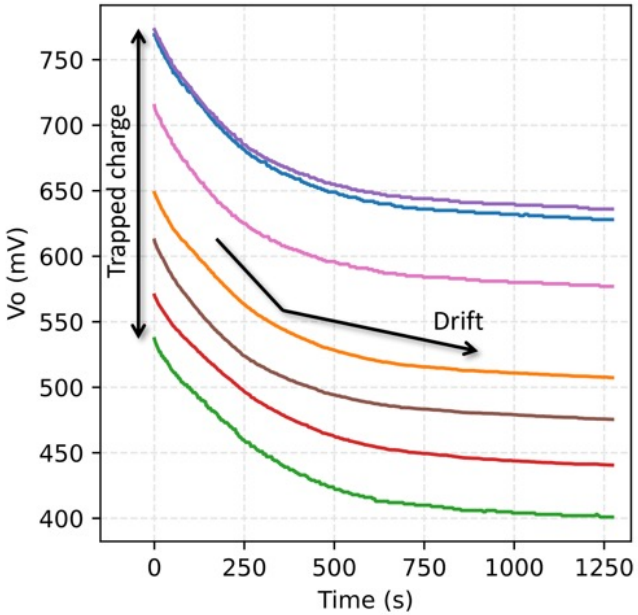

Source: P. Tripathi, C. Gulli, J. Broomfield, G. Alexandrou, M. Kalofonou, C. Bevan, N. Moser and P. Georgiou, "Classification of Nucleic Acid Amplification on ISFET Arrays using Spectrogram-based Neural Networks," Computers in Biology and Medicine, Elsevier, 2023.(Under Review)

Non idealities are spatially correlated

- My experiments with a previous chip Titanicks has brought me to the conclusion of spatial correlation
- I will test this hypothesis with further chips over the course of my PhD

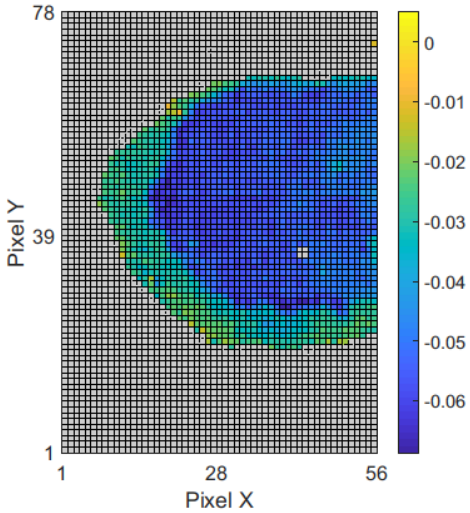

Drift rate in mV/s

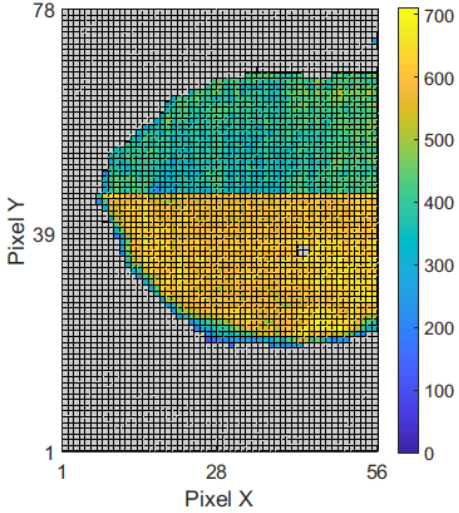

Initial uncompensated output in mV

Source: P. Tripathi, N. Moser and P. Georgiou, "A Neuron-Based ISFET Array Architecture with Spatial Sensor Compensation," *ISCAS 2019*

Application: DNA Detection

2 wells:

- Top well - sample
- Bottom well - control

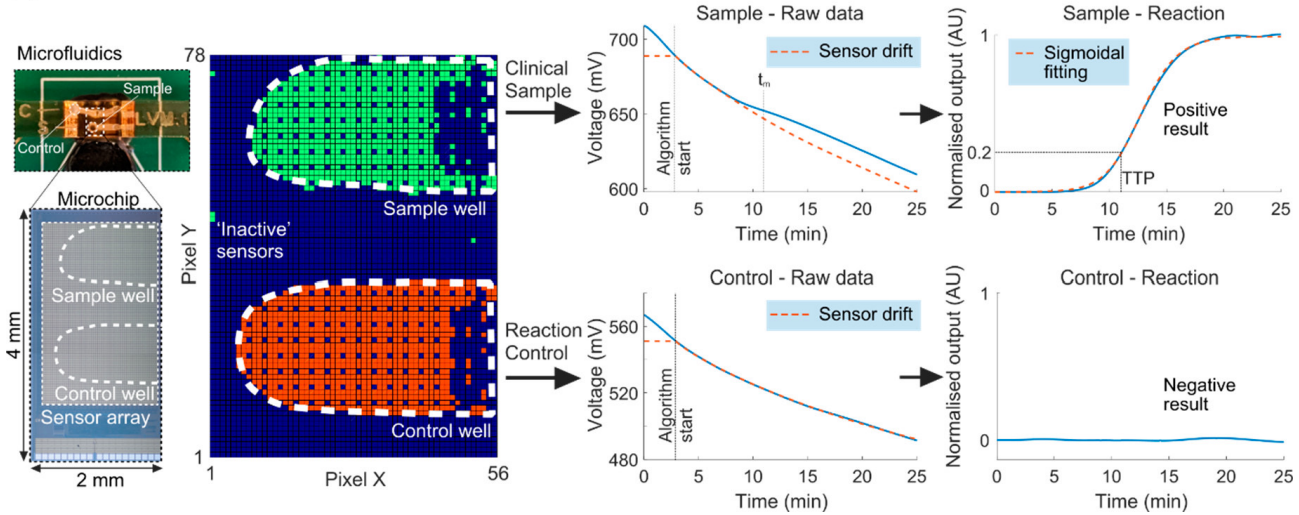

Neurons

- Spike domain
- High dynamic range
- Low power
- Cooperation
- Plasticity

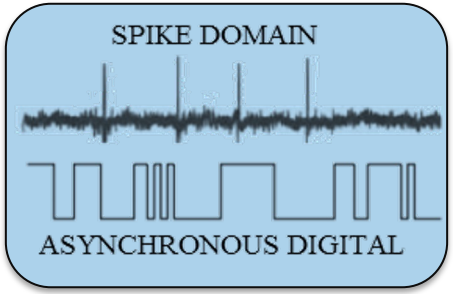

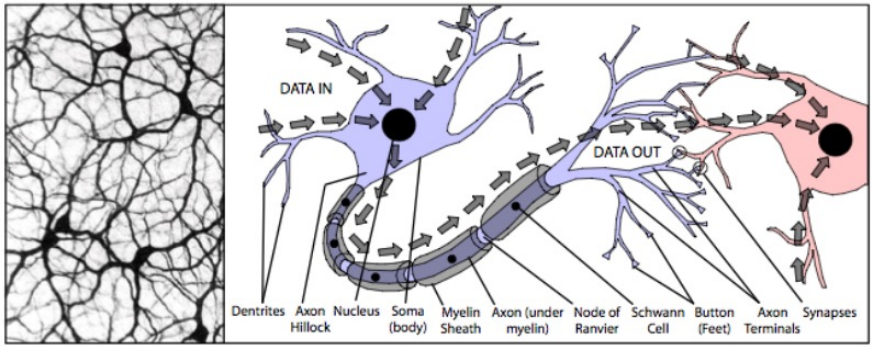

Source: I. Segev, “The materialistic brain: Your brain ingredients,” Synapses, Neuron and Brain, 2020.

Imperial College London

Background

Neuromorphic Intelligence

- Analogous to the morphology of nervous systems due to spiking
- Combines analog, asynchronous digital and logic circuits.
- Yields application specific devices optimal for edge computing.
- MOSFETs in Weak inversion use diffusion for charge transfer similar to the ionic current in neurons.

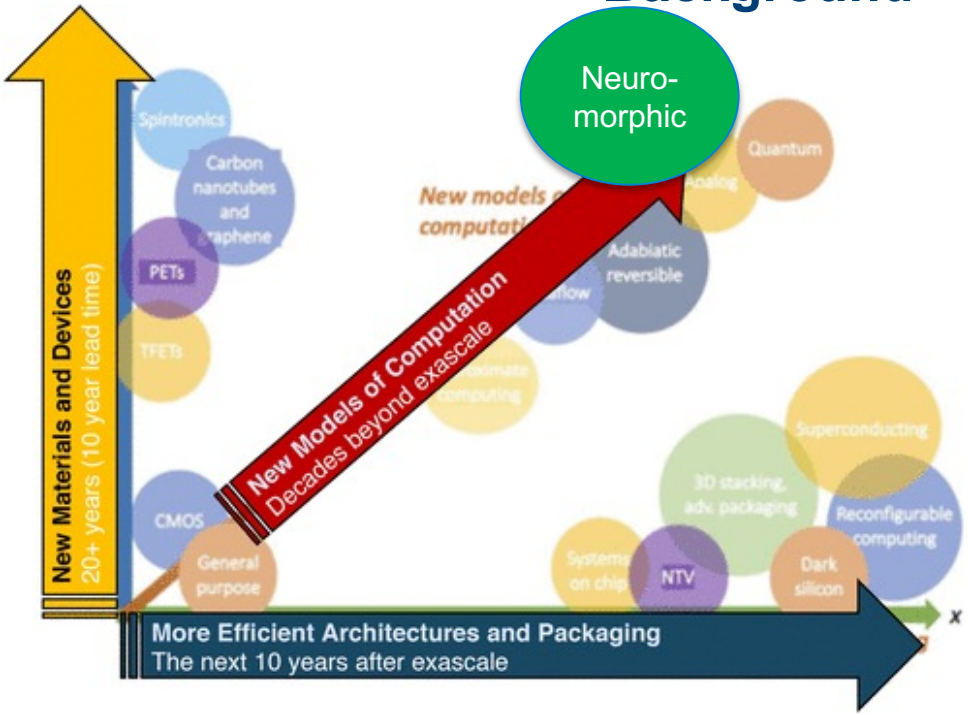

Opportunity

- Since both neurons and ISFETs respond to variation in ion concentrations, there is a great opportunity to combine neuromorphic circuits with potentiometric ISFET sensing.
- Asynchronous (Event based)
- Low latency
- Ultra low power

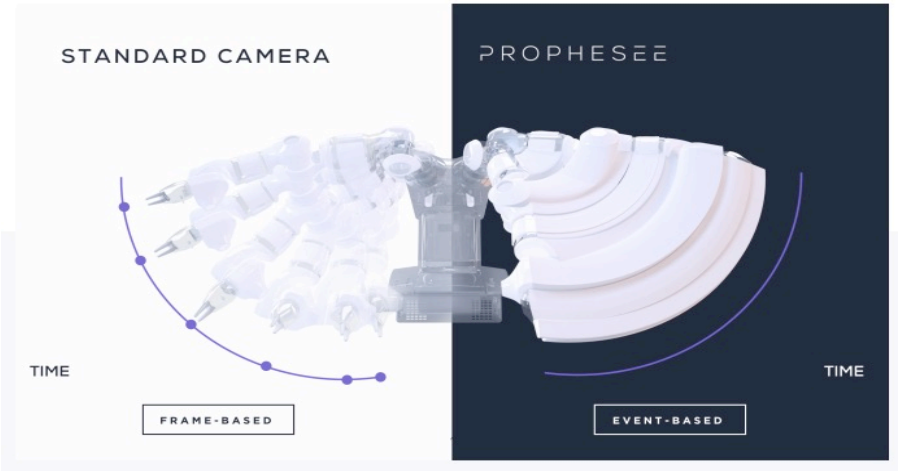

Source: Prophesee; P. Tripathi, N. Moser and P. Georgiou, “Multiple Ion-channel ISFET neuron for Lab-on-chip applications," *2021 IEEE Biomedical Circuits and Systems Conference(BIOCAS)*, 2021.

The Future of ML is Tiny and Bright

- 5 Quintillion bytes of data produced by IOT devices everyday.
- <1% of unstructured data is used.
- In TinyML, we are typically interested in sensor data in the form of an image or time series, enabling us to perform **spatial** or **time series** analysis using machine learning models at the edge.

Source: Applications of TinyML course, edX & Internet of Things (IoT) Data Continues to Explode Exponentially. Who Is Using That Data and How?, Cisco, 2018

Imperial College London

Opportunity

Brain Inspired ISFET Sensing

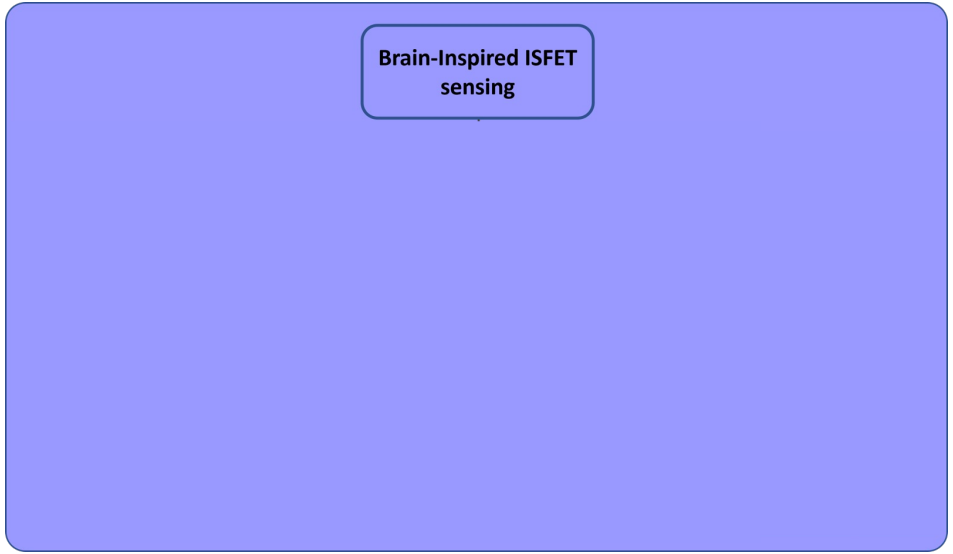

Research Questions

- What is the role of non-ideal effects on a cluster of neighboring ISFET pixels? Do non-ideal effects present any form of spatial correlation? What methods can be used to multiplex compensation approaches among clusters of ISFET sensors?
- How can slow chemical reactions on the surface of electrochemical sensors benefit from the event-based neuromorphic approaches?
- How can the neuromorphic approach be implemented for ISFET architectures?
- Are the properties of an ISFET sensor closer to an image sensor or to an audio sensor?

Research Questions

- What are the best transformation techniques to better visualize and make decisions from the ISFET sensors?
- What role can AI play in the speedup of diagnostics for new diseases? Does the use of AI-based solutions bring any concerns on privacy and security and how can edgeAI alleviate these concerns?
- What are the tradeoffs between compensation using neuromorphic approaches vs tinyML?

Current Progress

1 chip fabricated → ISFET neurons work → Spatial correlation proven → tinyML model for classification

Original Contributions

1. P. Tripathi, N. Moser and P. Georgiou, "A Neuron-Based ISFET Array Architecture with Spatial Sensor Compensation," *2019 IEEE International Symposium on Circuits and Systems (ISCAS)*, 2019, pp. 1-5.
2. P. Tripathi, N. Moser and P. Georgiou, “Multiple Ion-channel ISFET neuron for Lab-on-chip applications," *2021 IEEE Biomedical Circuits and Systems Conference(BIOCAS)*, 2021.
3. P. Tripathi, N. Moser and P. Georgiou, ”Background Inhibition for Drift Compensation using Neuromorphic ISFET Arrays,” 2023 IEEE International Symposium on Circuits and Systems (ISCAS), 2023.
4. P. Tripathi, C. Gulli, J. Broomfield, G. Alexandrou, M. Kalofonou, C. Bevan, N. Moser and P. Georgiou, ”Classification of Nucleic Acid Amplification on ISFET Arrays using Spectrogram-based Neural Networks,” Computers in Biology and Medicine, Elsevier, 2023.
5. T. Yao, P. Tripathi, L. Keeble, N. Moser and P. Georgiou, ”A Linear Weighted Neuromorphic ISFET Array with Offset Compensation,” 2022 IEEE International Symposium on Circuits and Systems (ISCAS), 2022, pp. 1072-1076.
6. K.Chen, P. Tripathi, N. Moser and P. Georgiou, ” A Wide-Range ISFET Readout Circuit with Low-Power Linearity Enhancement,” 2023 IEEE International Symposium on Circuits and Systems (ISCAS), 2023

Neuron based ISFET Arrays

- We presented neuromorphic-based ISFET arrays with encoding of pH in the spike domain and spatial compensation of device non-idealities in a cluster-based structure.
- The use of AER for array data acquisition enabled low power operation.
- Overall, this work paves the way to both neuron-based architectures for ISFET front-end and relaxed requirements for compensation circuit by leveraging on spatial correlation

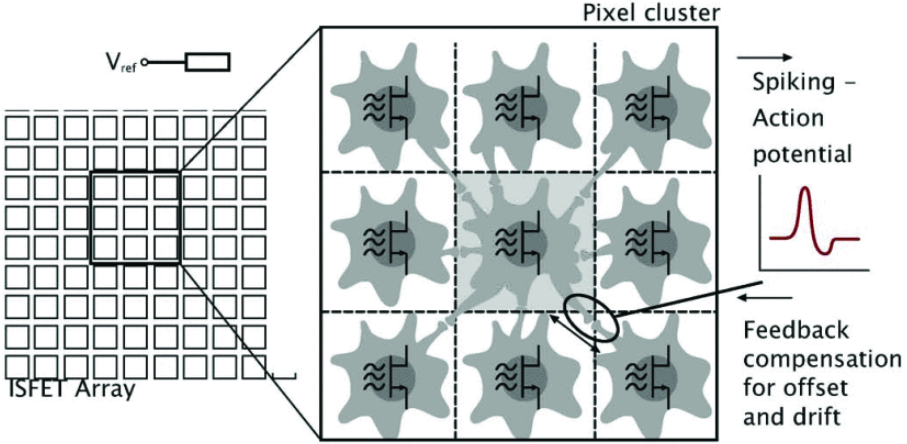

Source: P. Tripathi, N. Moser and P. Georgiou, "A Neuron-Based ISFET Array Architecture with Spatial Sensor Compensation," *ISCAS 2019*

Imperial College London

Current Progress

Pixel Architecture

- Readout Voltage to Spike frequency

$$f_{spk} = \frac{I_{cap} \times f_{rfr}}{I_{cap} + C_{mem} \times V \times f_{rfr}}$$

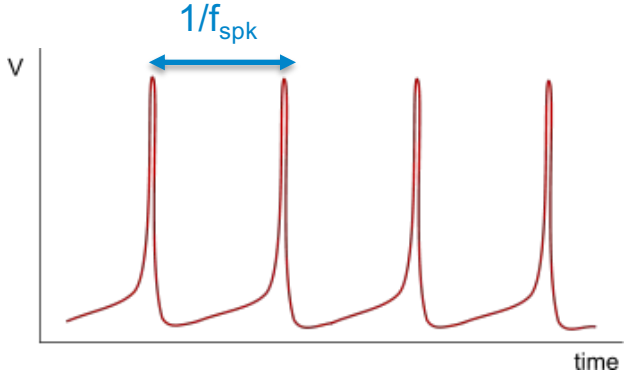

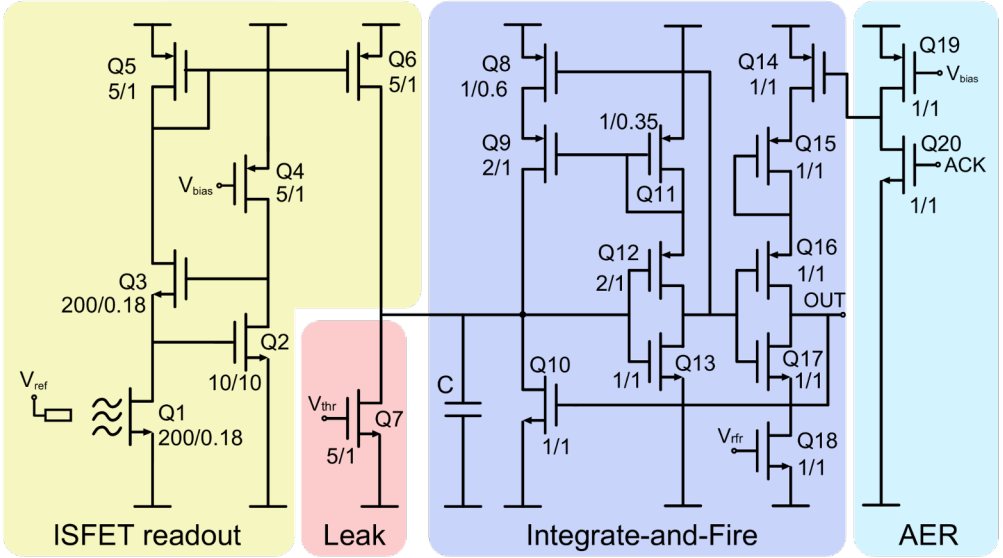

Pixel Architecture

Cluster-based System

- Left configuration sacrifices pixel area to implement the additional blocks.
- Right configuration implements the extra circuitry between the pixels, allowing a larger sensing area and more uniform imaging.

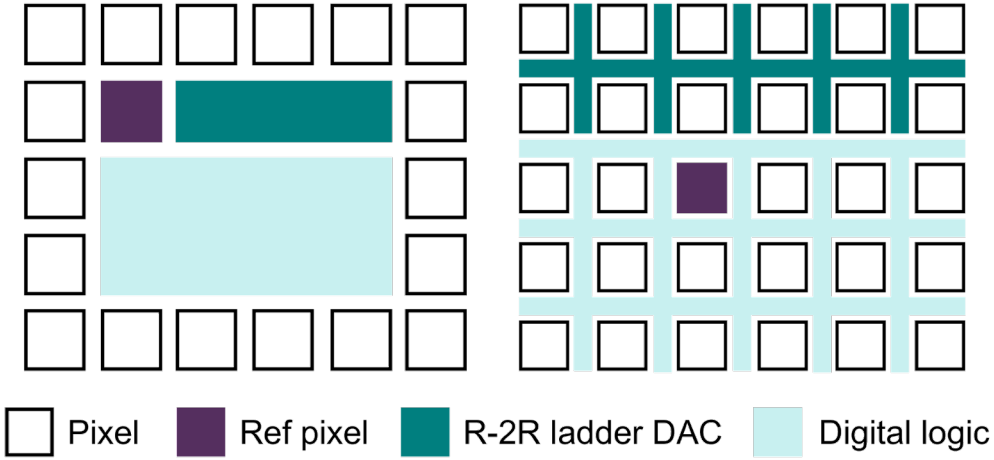

Cluster Structure

Source: P. Tripathi, N. Moser and P. Georgiou, "A Neuron-Based ISFET Array Architecture with Spatial Sensor Compensation," *ISCAS 2019*

Cluster-based System

- Spike domain makes compatible to the use of Address-Event Representation (AER).
- Logic contains:
  - Array control circuits,
  - Address encoding, and
  - Arbiter.

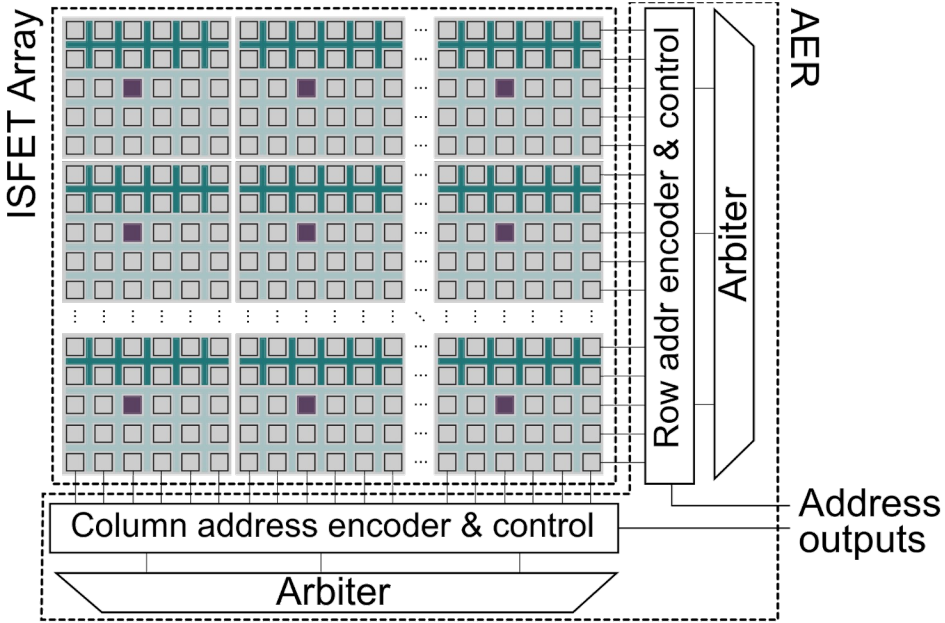

System Architecture with AER

Multiple Ion Channel ISFET neuron

- A novel mutiple ion-channel ISFET neuron is proposed in this study that performs spatial averaging using temporal integration at ultra low power consumption per pixel.
- This paper presents a novel approach towards implementing an on-chip sensor learning solution. This is achieved by a novel hardware implementation of backpropogation using predictive SAR logic.
- **Geoff Hinton is deeply suspicious of backpropagation and believes that there could be a better alternative approach***

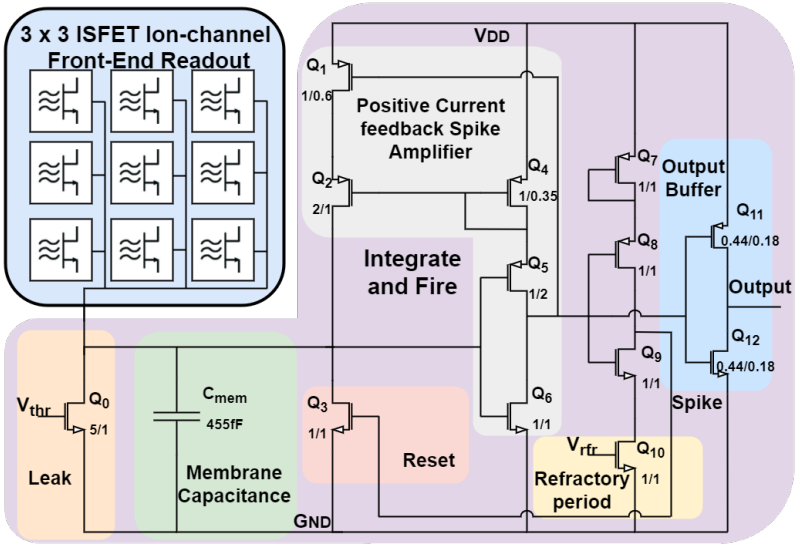

Source: https://medium.com/intuitionmachine/the-deeply-suspicious-nature-of-backpropagation-9bed5e2b085e; P. Tripathi, N. Moser and P. Georgiou, "Multiple Ion-channel ISFET neuron for Lab-on-chip applications," *2021 IEEE Biomedical Circuits and Systems Conference(BIOCAS)*, 2021.

Silicon Testing (Goku)

- Taped out first IC for testing.
- The preliminary results are listed here.

Specification	Value
Technology	0.18 μm
Power Supply	1.8 V
Gate Bias Voltage	100 mV
Voltage Sensitivity	0.026 KHz/mV
Chemical Sensitivity	0.33 KHz/pH
Sensitivity	12.82 mV/pH
W/L electrical	200 μm/0.18 μm
W$\times$L chemical	48.975 μm x 38.705 μm

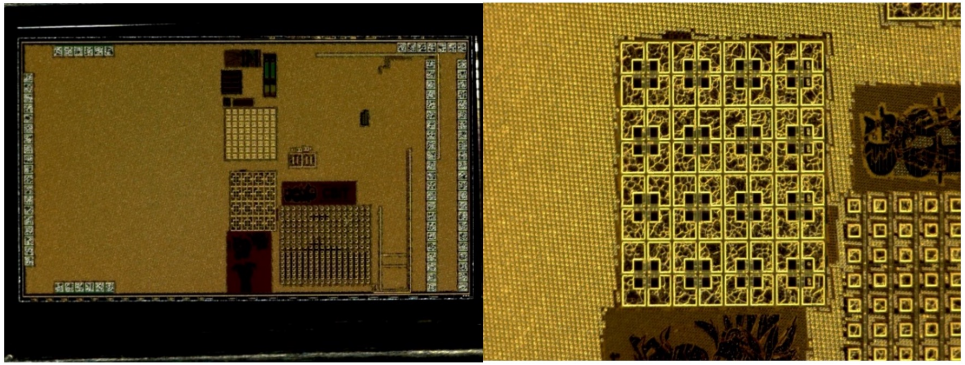

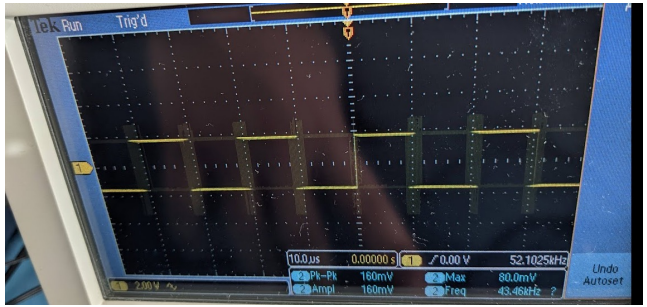

Photoreceptor vs ISFETs

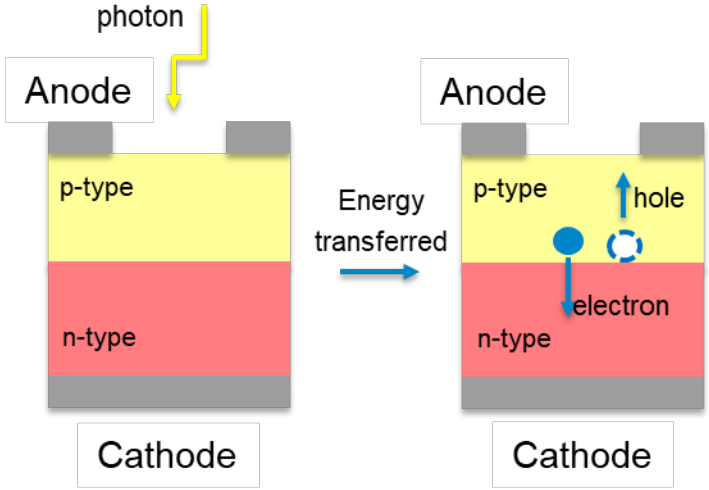

Photoreceptor

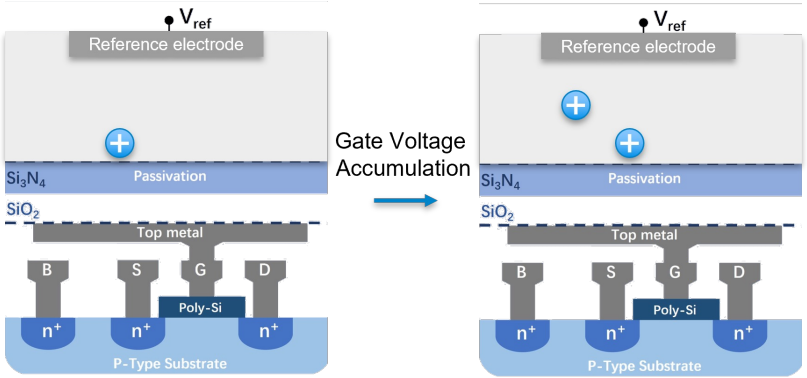

ISFETs

Source: P. Tripathi, N. Moser and P. Georgiou, ”Background Inhibition for Drift Compensation using Neuromorphic ISFET Arrays,” 2023 IEEE International Symposium on Circuits and Systems (ISCAS), 2023.

Background Inhibition using Winner take all

- This paper presents a winner-take-all (WTA) approach for implementing background inhibition in neuromorphic Ion-Sensitive Field-Effect Transistor (ISFET) arrays.

- Aim: Investigate the benefits of neuromorphic electronics by taking advantage of
  - fault-tolerant nature,
  - spatial connectivity,
  - spike-domain processing capabilities,
  - neuron inhibitions and
  - AER compatibility

Source: P. Tripathi, N. Moser and P. Georgiou, ”Background Inhibition for Drift Compensation using Neuromorphic ISFET Arrays,” 2023 IEEE International Symposium on Circuits and Systems (ISCAS), 2023.

Imperial College London

TINY ML

Current Progress

WTA Pixel Architecture

ISFET pixel that converts the pH on the surface of the gate to the spike domain.

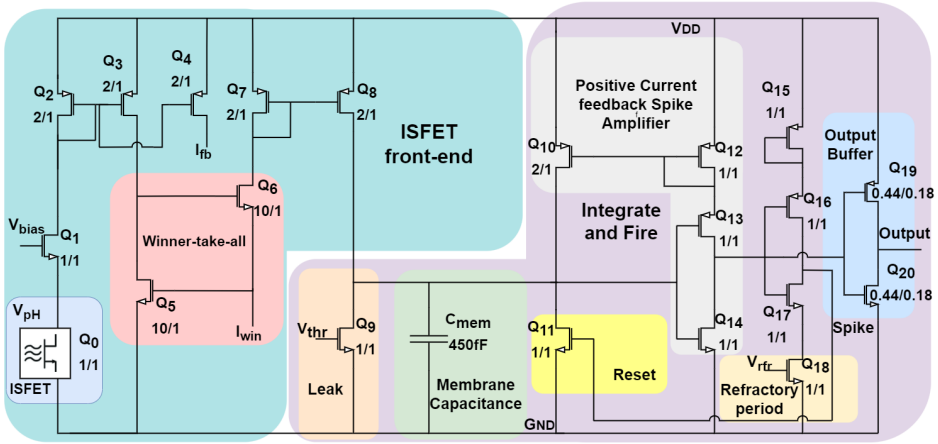

Neuromorphic WTA ISFET pixel

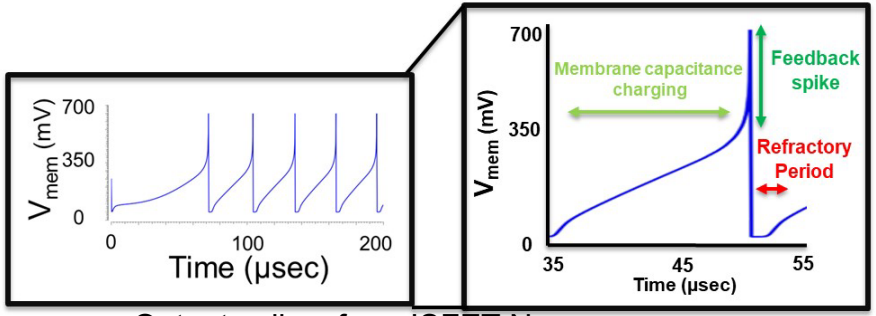

Output spikes from ISFET Neuron

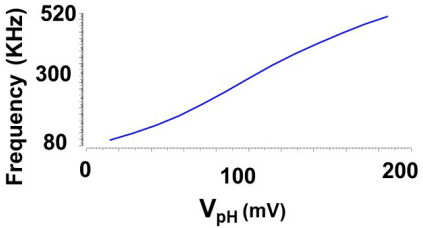

Spiking frequency vs VpH

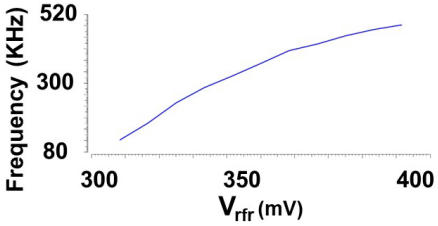

Spiking frequency vs Vrfr

Source: P. Tripathi, N. Moser and P. Georgiou, "Background Inhibition for Drift Compensation using Neuromorphic ISFET Arrays," 2023 IEEE International Symposium on Circuits and Systems (ISCAS), 2023.

Winner take all implementation

The WTA thus acts as a spatial filter which is adaptive due to the current averaging and acts as a bias current generator for the WTA. In the end, the address of spike generation is the location of the largest variation in ionic concentration.

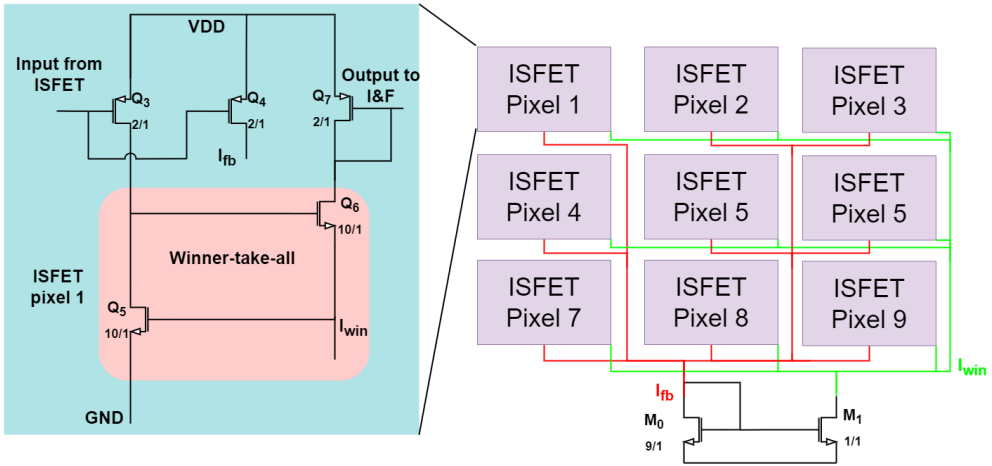

Circuit Architecture

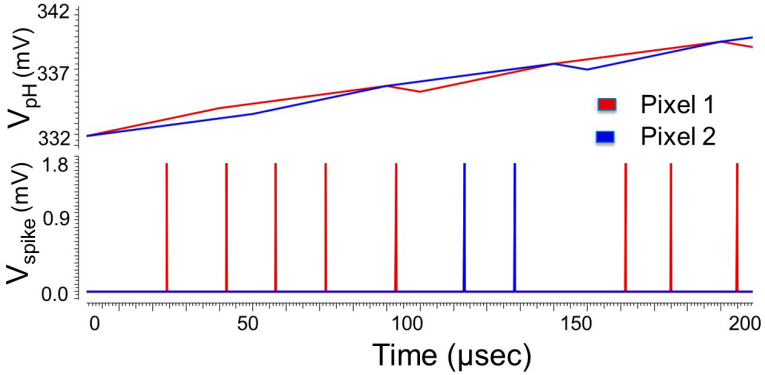

Winner take all simulation for 9 pixels with averaging feedback. Pixel 3 to 9 are set with a constant V_{pH} of 330mV with a drift of 1mV over 200µsec

Source: P. Tripathi, N. Moser and P. Georgiou, "Background Inhibition for Drift Compensation using Neuromorphic ISFET Arrays," 2023 IEEE International Symposium on Circuits and Systems (ISCAS), 2023.

Background Inhibition using Winner take all

The WTA can be operated in parallel and distributed across circuits to achieve spatial filtering, allowing tracking pixels for salient features like targeting areas of early nucleic acid amplification in molecular assays.

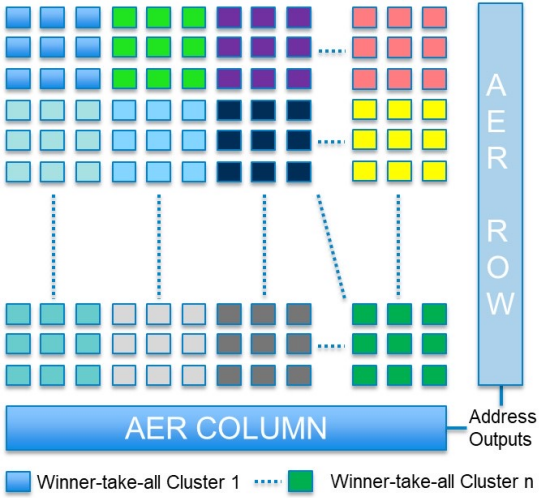

WTA Cluster Architecture

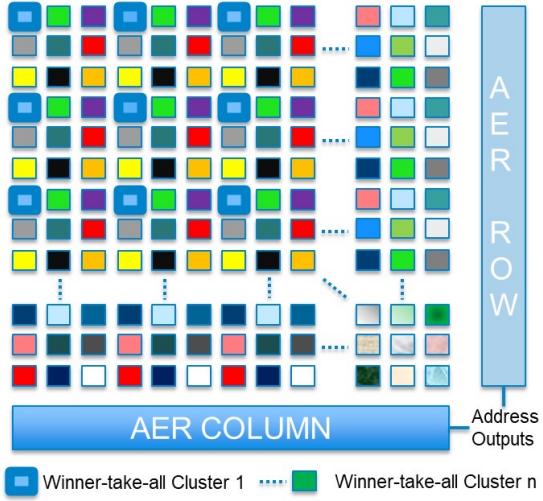

Distributed WTA Architecture

Source: P. Tripathi, N. Moser and P. Georgiou, ”Background Inhibition for Drift Compensation using Neuromorphic ISFET Arrays,” 2023 IEEE International Symposium on Circuits and Systems (ISCAS), 2023.

TinyML in Diagnostics

The contributions of this work includes:

- a benchmark for combining the field of deep learning with point-of-care lab-on-chip (LoC) diagnostics for infectious diseases and cancer

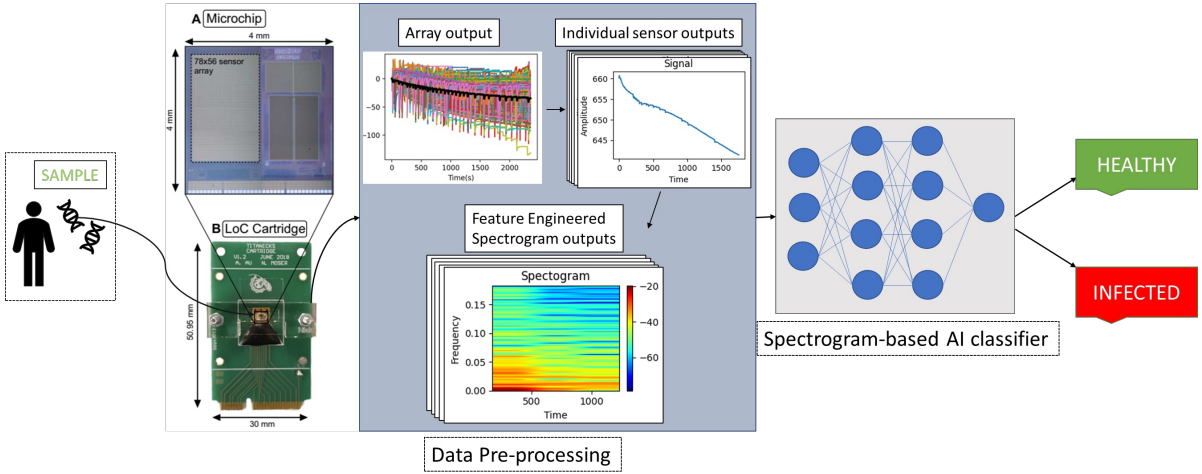

TinyML in Diagnostics

- a novel spectrogram-based approach that facilitates the application of image-processing ML techniques, including 2D-CNNs, for the classification of ISFET data.
- an approach that can help train neural networks with a limited dataset of infectious diseases for high precision and accuracy

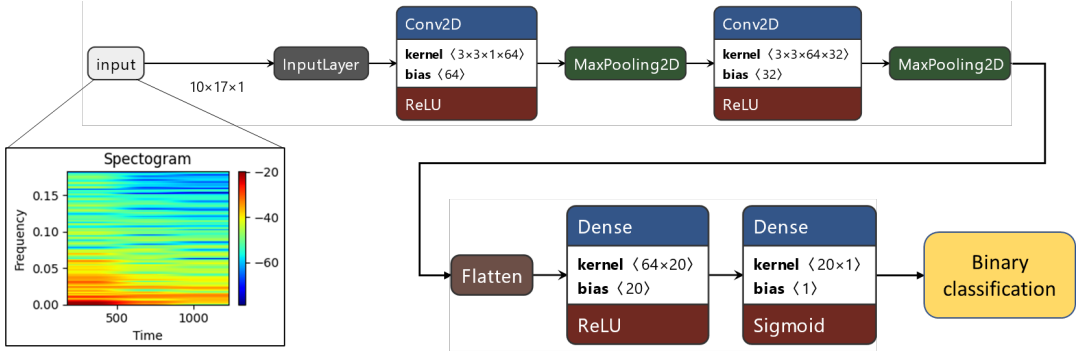

Source: P. Tripathi, C. Gulli, J. Broomfield, G. Alexandrou, M. Kalofonou, C. Bevan, N. Moser and P. Georgiou, "Classification of Nucleic Acid Amplification on ISFET Arrays using Spectrogram-based Neural Networks," Computers in Biology and Medicine, Elsevier, 2023.

TinyML in Diagnostics

- a framework towards accelerating the response to future pandemics by leveraging the combined advances in the fields of spectrogram, deep learning and electrochemical-based detection to

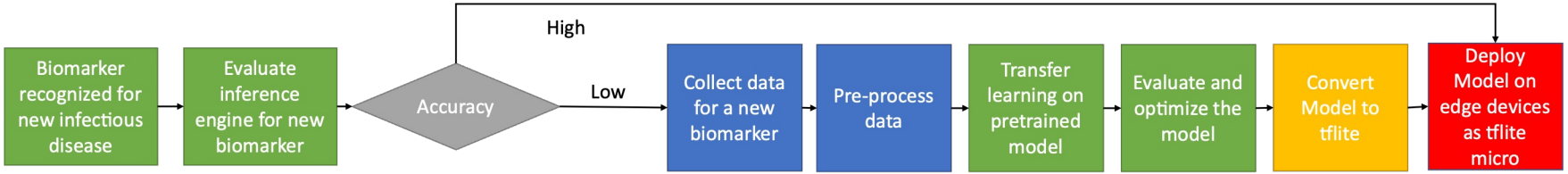

Source: P. Tripathi, C. Gulli, J. Broomfield, G. Alexandrou, M. Kalofonou, C. Bevan, N. Moser and P. Georgiou, "Classification of Nucleic Acid Amplification on ISFET Arrays using Spectrogram-based Neural Networks," Computers in Biology and Medicine, Elsevier, 2023.

Next Steps

- Taping out the WTA architecture and testing ISFETs on 65nm
- Implement deep learning classification algorithms on a microcontroller (Nano 33 BLE Sense)
- Run Multi-Ion imaging experiments for nucleic acid amplification detection.

Imperial College London

Thank You

Copyright Notice

www.tinyml.org